aeroQUAL

Series 100

Ozone Controller

User Guide

Distributor:
Wessex Power Technology Ltd, Dorset
Tel: +44 (0)845 520 0303
Fax: +44 (0)845 520 0304
Email: wpt@wessexpower.co.uk
www.wessexpower.co.uk

aeroQUAL

Contents

1. Controller Components **1**
2. Setting up the Controller **2**
2.1 External Control Wiring **3**
3. Operating Instructions **4**
3.1 Operating in Low or High Ozone Environments *4*
3.2 Operating as a Controller *5*
3.3 Operating as a Dual Alarm Switch *5*
3.4 Summary of LED Indicators *6*
3.5 Inlet Port Maintenance *6*
3.6 Setpoint Tables *7*
4. Specifications **8**
5. Drawings **9**
6. Troubleshooting **10**
7. Appendix **11**
7.1 Copyright *11*
7.2 Warranty *11*
7.3 Statements of Compliance *12*
7.4 Conditions *13*
7.5 Guidelines on How to Measure Ozone *14*

Version 1.1 (03.02.2010)

1. Ozone Controller Components

Series 100 Ozone Controller

The following components are supplied with the Series 100 Ozone Controller:

- Series 100 controller base
- Ozone sensor head (either high ozone 0-10 ppm or low ozone 0-0.5 ppm)
- User guide
- 3 rubber pads
- 4 Velcro dots

Please check that all these components have been supplied and contact your dealer or Aeroqual on email at: sales@aeroqual.com if any of the components are missing.

2. Setting up the Ozone Controller

Assembly

The following needs to be completed before the Ozone Controller is ready for use: -

- Insert the sensor head into the top of the controller. The sensor head is keyed to ensure the head is inserted correctly.
- Insert one end of the Cat 5 cable into the RJ45 connector.
- Wire up the other end of the Cat 5 cable as per the “Power Requirements” and “External Control Wiring” sections below.

Power Requirements

The Series 100 controller is designed to be powered by a 12VDC, 400mA ***regulated*** power supply.

Ensure that the power supply to the unit is sized to account for the voltage drop across the Cat 5 cable so that it delivers 12VDC to the unit. Typical resistance of Cat 5 cable is 9.38 Ohms per 100m at 10ºC.

The unit does not have an On/Off switch and is activated when power is supplied to the unit. Before powering up the unit, ensure that all the necessary wiring connections are in place.

NOTE: Do not insert or remove the sensor head while power is being supplied to the unit.

2.1 External Control Wiring

The pin numbers for the RJ45 connector, viewed from the front are numbered from 1 to 8 with pin number 1 being on the right.

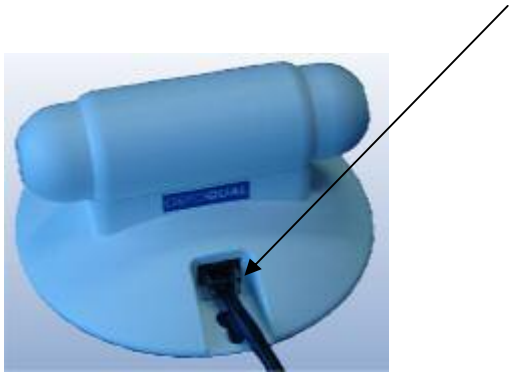

The pin designations are as follows:

1. +12VDC
2. 5-Volt Signal showing power connected to the S100
3. GND
4. Relay-2 (volt-free)
5. Relay-2 (volt-free)
6. Relay-1 (volt-free)
7. Relay-1 (volt-free)
8. GND

3. Operating Instructions

Warm up the controller to burn off contaminants on the sensor. During warm up the LED will flash green slowly. If the controller has not been run for a few days it may take an hour or two to reach full accuracy.

The Series 100 can operate either as a controller or an alarm switch. These modes control the two on-board relays, Relay 1 and Relay 2, in different ways. The required operating mode is selected by setting the mode dip switch B-2 to the required position – "off" for controller and "on" for dual alarm switch, as shown in the picture below.

3.1 Operating in Low or High Ozone Environments

The controller can operate either low or high ozone concentration sensor heads by setting the dip-switch B-1 to the required position as shown in the picture below.

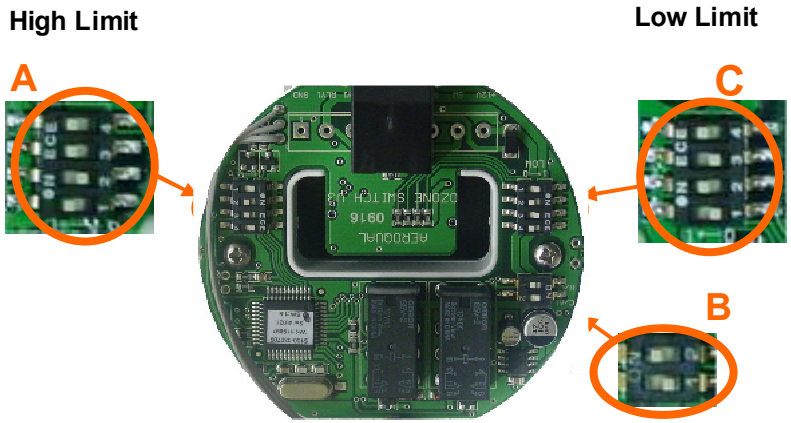

High / Low Conc (B1)
Control / Alarm (B2)

3.2 Operating as a Controller

Set the mode dip switch (B-2) to position "off". Set the low ("C") and high ("A") control limits ['dead band'] by configuring the dip switches as per the dip switch table on page 7. When in control mode relay 1 operates as per the table and diagram below. Relay 2 is opposite. Please ensure that any external equipment being controlled is connected to one of the relays.

Controller mode LED and Relay Status

Ozone	LED	Relay 1	Relay 2
below low limit	ORANGE	Closed	Open
between low and high limits	GREEN	*Closed if ozone concentration rising *Open if ozone concentration falling	*Open if ozone concentration rising *Closed if ozone concentration falling
above high limit	RED	Open	Closed

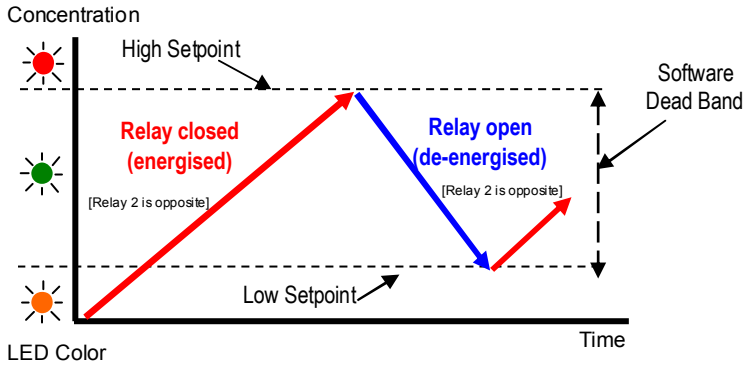

3.3 Operating as a Dual Alarm Switch

Set the mode dip switch (B-2) to the dual alarm switch position – "on". Set the low (C) and high (A) alarm limits by configuring the dip switches as per the dip switch table on page 7. In this mode the low limit dip switch controls Relay-1 and the high limit dipswitch controls Relay-2. The relay and LED status is given in the table on the next page.

Dual Alarm Switch mode LED and Relay Status

Ozone	LED	Relay 1	Relay 2
below low limit	GREEN	open	open
between low and high limits	ORANGE	closed	open
above high limit	RED	closed	closed

Note: If one of the dipswitches is set to zero in this mode then the corresponding relay will be non-operational and set to open. If sensor failure occurs then both relays are de-energized.

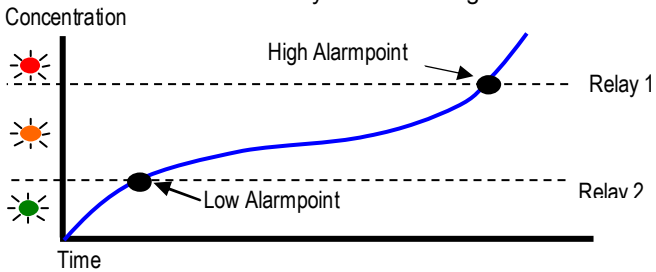

3.4 Summary of LED Indicators

LED Color	Meaning
Controller Mode	
Green (2 sec flashing)	Warm up (10 minute cycle)
Orange	Below low set point
Green	Between low and high set point
Red	Above high set point
Dual Alarm Switch mode	
Green (2 sec flashing)	Warm up (10 minute cycle)
Green	Below low set point
Orange	Between low and high set point
Red	Above high set point
Diagnostics	
Red (0.5 sec flashing)	Sensor failure or Sensor not connected properly
Orange (2 sec flash)	Dipswitches set incorrectly

3.5 Inlet Port Maintenance

The inlet port must be kept clean at all times. The port incorporates a stainless steel mesh that stops dust and lint from entering the sensor head. In dusty environments, this mesh can become blocked with dust and lint. Remove dust and lint manually.

3.6 Setpoint Tables

High/Low Range	
off	Low Range
on	High Range

Control/Alarm Dipswitch	
off	Control
on	Alarm

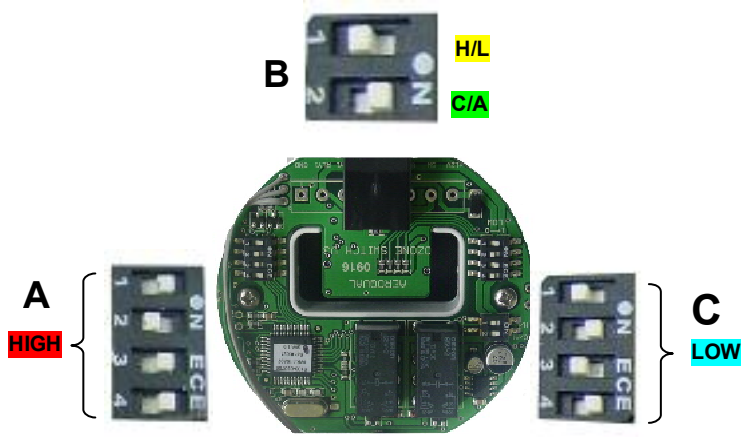

High Setpoint Dipswitch				Range	
1	2	3	4	Low Range (ppm)	High Range (ppm)
off	off	off	off	0.000[1]	0.000[1]
on	off	off	off	0.020	0.200
off	on	off	off	0.030	0.400
on	on	off	off	0.040	0.600
off	off	on	off	0.050	0.800
on	off	on	off	0.060	1.000
off	on	on	off	0.070	1.500
on	on	on	off	0.080	2.000
off	off	off	on	0.090	3.000
on	off	off	on	0.100	4.000
off	on	off	on	0.150	5.000
on	on	off	on	0.200	6.000
off	off	on	on	0.250	7.000
on	off	on	on	0.300	8.000
off	on	on	on	0.400	9.000
on	on	on	on	0.500	10.000

[1]not valid in control mode

Low Setpoint Dipswitch				Range	
1	2	3	4	Low Range (ppm)	High Range (ppm)
off	off	off	off	0.000[1]	0.000[1]
on	off	off	off	0.010	0.100
off	on	off	off	0.020	0.200
on	on	off	off	0.030	0.400
off	off	on	off	0.040	0.600
on	off	on	off	0.050	0.800
off	on	on	off	0.060	1.000
on	on	on	off	0.070	1.500
off	off	off	on	0.080	2.000
on	off	off	on	0.090	3.000
off	on	off	on	0.100	4.000
on	on	off	on	0.150	5.000
off	off	on	on	0.200	6.000
on	off	on	on	0.250	7.000
off	on	on	on	0.300	8.000
on	on	on	on	0.350	9.000

[1]not valid in control mode

4. Specifications – Series 100

Sensor type	Gas Sensitive Semiconductor
Measurement range	
Low concentration Ozone Head	0.000 to 0.500 ppm
High concentration Ozone Head	0.00 to 10.00 ppm
Accuracy	
Low concentration Ozone Head	± 0.008 ppm (0 to 0.100 ppm)
	± 10% (0.100 to 0.500 ppm)
High concentration Ozone Head	± 10% (0.00 to 1.00 ppm)
	± 15% (1.00 to 10.00ppm)
T90 response rate (standard)	
Low concentration Ozone Head	70 seconds
High concentration Ozone Head	60 seconds
Operating temperature range	-5°C to 50°C
Relative humidity limit	5% to 95%
Removable / replaceable sensor heads	Yes
Control and Alarm set points	Dip switches
Control or dual switch mode setting	Dip switch
Relay connection for control & switching	Volt free contacts
	(Max voltage-28V) (Max current -150mA)
Power Requirements (User supplied):	12 VDC, 400 mA
	[power supply must be regulated]
Unit Interface (power, control signal)	RJ45 connector
Height (with sensor head):	64 mm
Diameter of base	130 mm

5. Drawings

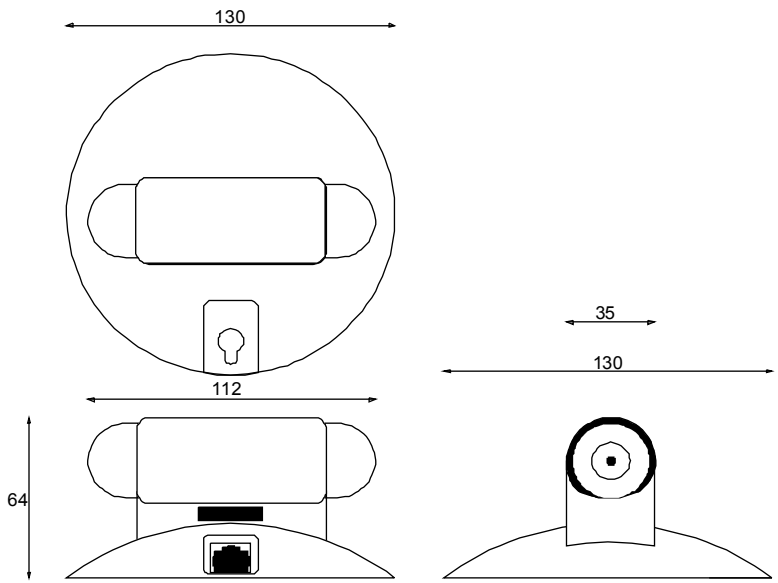

6. Troubleshooting

Fault description	Possible cause	Remedy
No power	Lead connection broken	Reconnect power lead
	Power supply failure	Replace 12V power supply
	Damaged base electronics	Replace base
Sensor failure when new sensor	Insufficient warm up	Run the sensor for 24-48 hours
	Air contaminated	Move the sensor to a cleaner environment and check reading
	Sensor not plugged in	Plug in the sensor properly
	Sensor damaged	Replace sensor
Sensor showing high reading under zero gas conditions	Background gas level higher than normal	Move sensor to clean air to recheck
	Interferent gas present	Move sensor to clean air to recheck
	Sensor zero drift	Re-zero sensor in a clean stable background
	Sensor damaged	Replace sensor
Sensor showing higher than expected reading in the presence of sensor gas	Zero calibration incorrect	Zero calibrate sensor
	Span calibration incorrect	Span calibrate sensor
	Sensor correct	Check calibration of gas generator
	Interferent gas present	Move sensor to clean air and check reading upon exposure to known gas concentration
	Sensor Calibration lost	Replace / refurbish sensor
Sensor output noisy	Power supply noise	Install regulated power supply
	Local air flow too high	Reduce air flow
	Environmental conditions fluctuating	Reduce fluctuations
Sensor showing lower than expected reading in the presence of sensor gas	Zero calibration incorrect	Zero calibrate sensor
	Span calibration incorrect	Span calibrate sensor
	Sensor correct	Check calibration of gas generator
	Sensor inlet contaminated	Clean sensor inlet filter and mesh
	Interferent gas present	Move sensor to clean air and check reading upon exposure to known gas concentration
	Gas reactive and decomposing before detection	Move the monitor closer to the source of the gas
	Sensor calibration lost	Replace / refurbish the sensor
Red LED (0.5sec flash)	Sensor failure	Replace sensor
	Sensor not connected properly	Remove and re-insert sensor correctly
Orange LED (2sec flash)	Dipswitch set incorrectly	Check dipswitch settings and adjust

7. Appendix

7.1 Copyright

Copyright Aeroqual Limited. All rights reserved. Reproduction, transfer, distribution or storage of part or all of the contents of this document in any form without the prior written permission of Aeroqual Limited is prohibited.

“Aeroqual” and “Aeroqual Limited – Making the Invisible Visible” are registered trademarks of Aeroqual Limited. Other product and company names mentioned herein may also be trademarks or trade names.

Aeroqual operates a policy of continuous development. Aeroqual reserves the right to make changes and improvements to any of the products described in this document without prior notice.

Under no circumstances shall Aeroqual be responsible for any loss of data or income or any special, incidental, consequential or indirect damages howsoever caused.

The contents of this document are provided "as is". Except as required by applicable law, no warranties of any kind, either express or implied, including, but not limited to, the implied warranties of merchantability and fitness for a particular purpose, are made in relation to the accuracy, reliability or contents of this document.

Aeroqual reserves the right to revise this document or withdraw it at any time without prior notice. The availability of particular products may vary by region. Please check with the Aeroqual dealer nearest to you.

7.2 Warranty

Aeroqual warrants this product to be free from defects in material and workmanship at the time of its original purchase by a consumer, and for a subsequent period as stated in the following table:

If, during the warranty period, this product fails to operate under normal use and service, due to improper materials or workmanship, Aeroqual subsidiaries, authorized distributors or authorized service partners will, at their option, either repair or replace the product in accordance with the terms and conditions stipulated herein.

Products	Warranty Period
Series 100 Controller	One year from the date of purchase
Sensor heads	Six months from the date of purchase
Accessories	One year from the date of purchase

7.3 Statements of Compliance

The Aeroqual Series 100 Controller complies with EN 55022: 1998.

The Aeroqual Series 100 Controller complies with EN 61000-6-1: 2001.

The Aeroqual Series 100 Ozone Controller complies with Part 15 of the FCC Rules. Operation is subject to the following two conditions: (1) these devices may not cause harmful interference, and (2) these devices must accept any interference received, including interference that may cause undesired operation.

NOTE: This equipment has been tested and found to comply with the limits for a Class B digital device, pursuant to Part 15 of the FCC Rules. These limits are designed to provide reasonable protection against harmful interference in a residential installation. This equipment generates, uses and can radiate radio frequency energy and, if not installed and used in accordance with the instructions, may cause harmful interference to radio communications. However, there is no guarantee that interference will not occur in a particular installation. If this equipment does cause harmful interference to radio or television reception, which can be determined by turning the equipment off and on, the user is encouraged to try to correct the interference by one or more of the following measures:

- Reorient or relocate the receiving antenna.
- Increase the separation between the equipment and receiver.
- Connect the equipment into an outlet on a circuit different from that to which the receiver is connected.
- Consult the dealer or an experienced radio/TV technician for help.

7.4 Conditions

1. The warranty is valid only if the original receipt issued to the original purchaser by the dealer, specifying the date of purchase, is presented with the product to be repaired or replaced. Aeroqual reserves the right to refuse warranty service if this information has been removed or changed after the original purchase of the product from the dealer.

2. If Aeroqual repairs or replaces the product, the repaired or replaced product shall be warranted for the remaining time of the original warranty period or for ninety (90) days from the date of repair, whichever is longer. Repair or replacement may be via functionally equivalent reconditioned units. Replaced faulty parts or components will become the property of Aeroqual.

3. This warranty does not cover any failure of the product due to normal wear and tear, damage, misuse, including but not limited to use in any other than the normal and customary manner, in accordance with Aeroqual's user guide for use, faulty installation, calibration and maintenance of the product, accident, modification or adjustment, events beyond human control, improper ventilation and damage resulting from liquid or corrosion.

4. This warranty does not cover product failures due to repairs, modifications or improper service performed by a non-Aeroqual authorized service workshop or opening of the product by non-Aeroqual authorized persons.

5. The warranty does not cover product failures which have been caused by use of non-Aeroqual original accessories.

6. This warranty becomes void if a non-Aeroqual approved AC/DC adaptor or battery is used.

7. Tampering with any part of the product will void the warranty.

8. Damage to the sensors can occur through exposure to certain sensor poisons such as silicones, tetraethyl lead, paints and adhesives. Use of Aeroqual sensors in these environments containing these materials may (at the discretion of Aeroqual) void the warranty on the sensor head. Exposure to levels of ozone outside of the design range of a specific Aeroqual sensor head can adversely affect the calibration of that sensor head and will also void this warranty as it applies to the replacement of sensor heads.

9. Aeroqual makes no other express warranties, whether written or oral, other than contained within this printed limited warranty. To the fullest extent allowable by law all warranties implied by law, including without limitation the implied warranties of merchantability and fitness for a particular purpose, are expressly excluded, and in no event shall Aeroqual be liable for incidental or consequential damages of any nature whatsoever, however they arise, from the purchase or use of the product, and including but not limited to lost profits or business loss.

   Some countries restrict or do not allow the exclusion or limitation of incidental or consequential damage, or limitation of the duration of implied warranties, so the preceding limitations or exclusions may not apply to you. This warranty gives you specific legal rights, and you may also have other rights, which may vary from country to country.

7.5 Guidelines on How to Measure Ozone

The following information is presented to help users operate their Aeroqual Ozone Controller in the most effective and efficient manner.

General

- Ozone is heavier than air and tends to sink. Thus detection of leaks from ozone generating equipment should be performed at the most appropriate position.
- Ozone will react and decompose on surfaces such as walls, furniture etc.
- Smell is not a reliable test for the presence or concentration of ozone as the odour threshold varies widely between people and is affected by local ambient conditions.

Permanent Controller Placement

- The Aeroqual Ozone Controller has been designed to measure the ambient concentration of ozone. The controller must not be placed directly in an ozone stream.
- For indoor local area monitoring attach the controller to an inert surface with the inlet unobstructed.
- For leak detection mount the unit near the ozone equipment.
- Ensure that the controller is protected from excessive water splashing, dust, vibration, excessive heat or cold, high concentrations of ozone and excessive swings in humidity.

False Readings

- The Aeroqual Ozone Controller has been designed to respond selectively to ozone, however other oxidizing gases such as chlorine and nitrogen dioxide can generate false readings if they are at high concentrations. High concentrations of hydrocarbon gases such as vapours of alcohol, oils and solvents can reduce and mask the concentration of ozone.

NOTES